AC20-D to AC60-D Series F. R. L. Combination



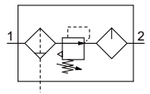

Order Example:
Option/Semi-standard: Select one each for **a** to **j**.
Option/Semi-standard symbol:
When more than one specification is required, indicate in alphanumeric order.
Example) AC30-F03DE1-16NR-D

Ordering Code

AC20-D to AC60-D Series F. R. L. Combination

AC30 - □ ① 03 ② DE ③ - □ ④ - □ ⑤ - D ⑥

		Symbol	Description	① Body size 20	30	40	50	60
②	Pipe thread type	Nil	Rc	●	●	●	●	●
		N[*1)]	NPT	●	●	●	●	●
		F[*2)]	G	●	●	●	●	●
③	Port size	01	1/8	●	—	—	—	—
		02	1/4	●	●	●	—	—
		03	3/8	—	●	●	—	—
		04	1/2	—	—	●	—	—
		06	3/4	—	—	●	●	—
		10	1	—	—	—	●	●
④ Option	a Float type auto drain	Nil	Without auto drain	●	●	●	●	●
		C[*3)]	N.C. (Normally closed) Drain port is closed when pressure is not applied.	●	●	●	●	●
		D[*4)]	N.O. (Normally open) Drain port is open when pressure is not applied.	—	●	●	●	●
	b Pressure gauge[*5)]	Nil	Without pressure gauge	●	●	●	●	●
		E	Square embedded type pressure gauge (with limit indicator)	●	●	●	●	●
		G	Round type pressure gauge (with limit indicator)	●	●	●	●	●
		M	Round type pressure gauge (with color zone)	●	●	●	●	●
	b Digital pressure switch	E1	Output: NPN output, Electrical entry: Wiring bottom entry	●	●	●	●	●
		E2	Output: NPN output, Electrical entry: Wiring top entry	●	●	●	●	●
		E3	Output: PNP output, Electrical entry: Wiring bottom entry	●	●	●	●	●
		E4	Output: PNP output, Electrical entry: Wiring top entry	●	●	●	●	●
⑤ Attachment	c Pressure relief 3-port valve	Nil	Without attachment	●	●	●	●	●
		V	Mounting position: AF + AR + AL + V	●	●	●	●	—
⑥ Semi-standard	d Set pressure[*6)]	Nil	0.05 to 0.85 MPa setting	●	●	●	●	●
		1	0.02 to 0.2 MPa setting	●	●	●	●	●
	e Bowl	Nil	Polycarbonate bowl	●	●	●	●	●
		2	Metal bowl	●	●	●	●	●
		6	Nylon bowl	●	●	●	●	●
		8	Metal bowl with level gauge	—	●	●	●	●
		C	With bowl guard	●	—[*7)]	—[*7)]	—[*7)]	—[*7)]
		6C	With bowl guard (Nylon bowl)	●	—[*8)]	—[*8)]	—[*8)]	—[*8)]
	f Air filter drain port[*9)]	Nil	With drain cock	●	●	●	●	●
		J[*10)]	Drain guide 1/8	●	—	—	—	—
			Drain guide 1/4	—	●	●	●	●
		W[*11)]	Drain cock with barb fitting (for Φ6×Φ4 nylon tube)	—	●	●	●	●
	g Lubricator lubricant exhaust port	Nil	Without drain cock	●	●	●	●	●
		3[*12)]	Lubricator with drain cock	●	●	●	●	●
	h Exhaust mechanism	Nil	Relieving type	●	●	●	●	●
		N	Non-relieving type	●	●	●	●	●
	i Flow direction	Nil	Flow direction: Left to right	●	●	●	●	●
		R	Flow direction: Right to left	●	●	●	●	●
	j Unit	Nil	Unit on product label: MPa, °C, Pressure gauge in SI units: MPa	●	●	●	●	●
		Z[*13)]	Unit on product label: psi, °F, Pressure gauge: MPa/psi dual scale	○[*15)]	○[*15)]	○[*15)]	○[*15)]	○[*15)]
		ZA[*14)]	Digital pressure switch: With unit selection function	△[*16)]	△[*16)]	△[*16)]	△[*16)]	△[*16)]

AC20-D to AC60-D Series F. R. L. Combination

*1) Drain guide is NPT1/8 (applicable to the AC20-D) and NPT1/4 (applicable to the AC30-D to AC60-D). The auto drain port comes with a Φ3/8" One-touch fitting (applicable to the AC30-D to AC60-D).
*2) Drain guide is G1/8 (applicable to the AC20-D) and G1/4 (applicable to the AC30-D to AC60-D).
*3) When pressure is not applied, condensate which does not start the auto drain mechanism will be left in the bowl. Releasing the residual condensate before ending operations for the day is recommended.
*4) If the compressor is small [0.75 kW, discharge flow is less than 100 L/min (ANR)], air leakage from the drain cock may occur during the start of operations. N.C. type is recommended.
*5) When the pressure gauge is attached, a 1.0 MPa pressure gauge will be fitted for standard (0.85 MPa) type. 0.4 MPa pressure gauge for 0.2 MPa type.
*6) Pressure can be set higher than the specification pressure in some cases, but use pressure within the specification range.
*7) A bowl guard is provided as standard equipment (polycarbonate).
*8) A bowl guard is provided as standard equipment (nylon).
*9) The combination of float type auto drain C and D is not available.
*10) Without a valve function.
*11) The combination of metal bowl 2 and 8 is not available.
*12) When choosing with W: Air filter drain port, the drain cock of a lubricator will be with barb fittings.
*13) For the pipe thread type: NPT
Cannot be used with M: Round type pressure gauge (with color zone). Available by request for special. The digital pressure switch will be equipped with the unit selection function, setting to psi initially.
*14) For options: E1, E2, E3, E4
*15) ○: For the pipe thread type: NPT only.
*16) △: Select with options: E1, E2, E3, E4.

Specifications

Model		AC20-D	AC30-D	AC40-D	AC40-06-D	AC50-D	AC60-D
Component	Air Filter [AF]	AF20-D	AF30-D	AF40-D	AF40-06-D	AF50-D	AF60-D
	Regulator [AR]	AR20-D	AR30-D	AR40-D	AR40-06-D	AR50-D	AR60-D
	Lubricator [AL]	AL20-D	AL30-D	AL40-D	AL40-06-D	AL50-D	AL60-D
Port size		1/8, 1/4	1/4, 3/8	1/4, 3/8, 1/2	3/4	3/4, 1	1
Pressure gauge port size[*1)] [AR]		1/8					
Working medium		Air					
Working temperature[*2)]		-5 to 60°C (No freezing)					
Proof pressure		1.5MPa					
Max. Operating pressure		1.0MPa					
Auto drain minimum operating pressure	N.C. [AF]	0.1MPa	0.15MPa				
	N.O. [AF]	—	0.1MPa				
Set pressure range [AR]		0.05 to 0.85 MPa					
Nominal filtration rating [AF]		5 μm					
Compressed air purity class		ISO 8573-1:2010 [6 : 4 : –]					
Drain capacity [AF]		8 cm³	25 cm³	45 cm³			
Min. dripping flow rate [AL][*3)]		15 L/min (ANR)	Port size 1/4: 30 L/min (ANR) Port size 3/8: 40 L/min (ANR)	Port size 1/4: 30 L/min (ANR) Port size 3/8: 40 L/min (ANR) Port size 1/2: 50 L/min (ANR)	50 L/min (ANR)	190 L/min (ANR)	220 L/min (ANR)
Oil capacity [AL]		25 cm³	55 cm³	135 cm³			
Recommended lubricant [AL]		Class 1 turbine oil (ISO VG32)					
Bowl material [AF/AL]		Polycarbonate					
Bowl guard [AF/AL]		Semi-standard (Steel)	Standard (Polycarbonate)				
Construction [AR]		Relieving type					

*1) Pressure gauge connection threads are not available for F.R.L. unit with a square embedded type pressure gauge or with a digital pressure switch.
*2) -5 to 50°C for the products with the digital pressure switch.
*3) The flow rate is 5 drops or greater/min under the following conditions: Inlet pressure of 0.5 MPa; Class 1 turbine oil (ISO VG32); Temperature at 20°C; Oil adjustment valve fully open.
For a circuit that repeatedly turns ON and OFF on the outlet side, make the adjustment so that the average air consumption per minute becomes the minimum dripping flow rate or more.

AC20-D to AC60-D Series F. R. L. Combination

Main Dimensions

AC20-D

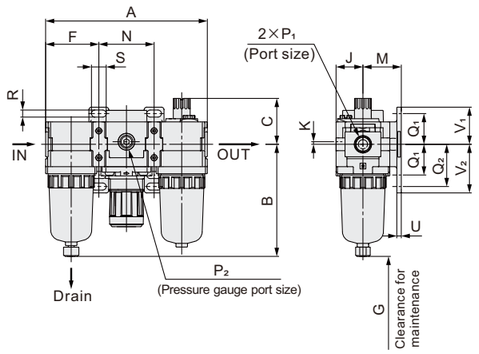

AC30-D

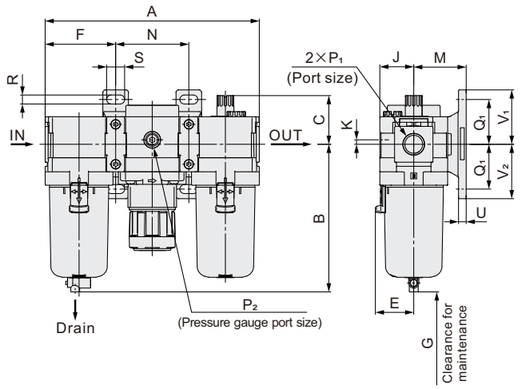

AC40-D to AC40-06-D

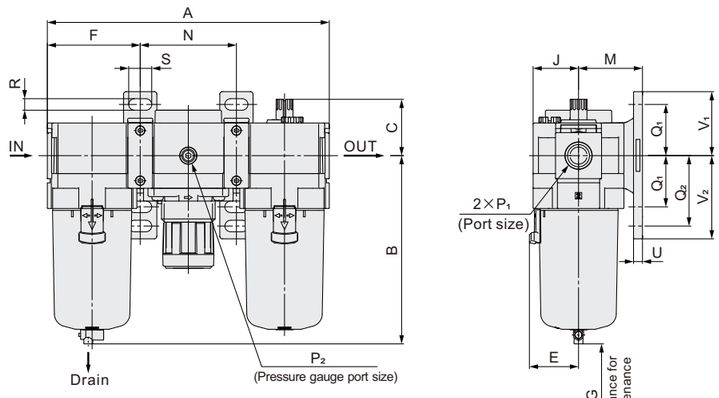

AC50-D to AC60-D

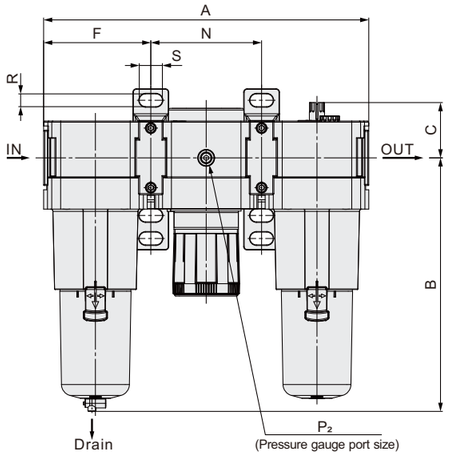

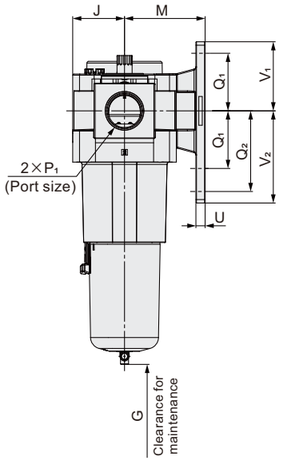

AC20-D to AC60-D Series F. R. L. Combination

Main Dimensions

Applicable model	Optional specifications			
	Square embedded type pressure gauge	Digital pressure switch	Round type pressure gauge	Round type pressure gauge (with color zone)
AC20-D to AC60-D	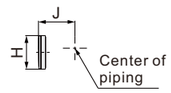	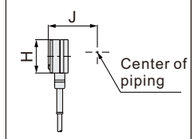	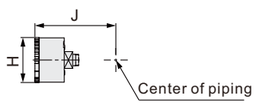	

Applicable model	Optional specifications	Semi-standard					
	With auto drain	PC/PA bowl		Metal bowl		Metal bowl with level gauge	
		Drain cock with barb fitting	With drain guide	With drain cock	With drain guide	With drain cock	With drain guide
AC20-D	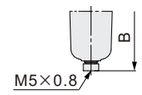		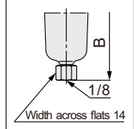		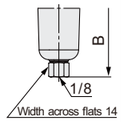		
AC30-D to AC60-D	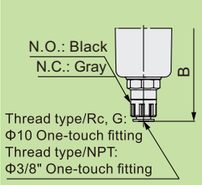	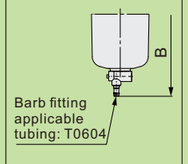	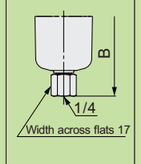	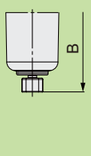	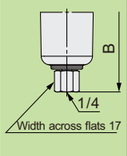	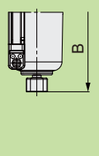	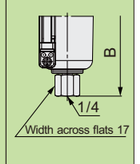

Model	Standard specifications										Bracket mount								
	P₁	P₂	A	B	C	E	F	G	J	K	M	N	Q₁	Q₂	R	S	U	V₁	V₂
AC20-D	1/8, 1/4	1/8	126.4	87.6	35.9	—	41.6	60	21	2	30	43.2	24	33	5.5	11.5	3.5	29	38
AC30-D	1/4, 3/8	1/8	167.4	115.4	38.1	30	55.1	80	26.5	3.5	41	57.2	35	—	7	14	6	42.5	42.5
AC40-D	1/4, 3/8, 1/2	1/8	220.4	147.1	44	38.4	72.6	110	35.5	—	50	75.2	40	55	9	18	7	50	65
AC40-06-D	3/4	1/8	235.4	149.1	44	38.4	77.6	110	35.5	—	50	80.2	40	55	9	18	7	50	65
AC50-D	3/4, 1	1/8	282.4	220.1	48	—	93.1	110	45	—	70	96.2	50	70	11	20	8	60	80
AC60-D	1	1/8	297.4	234.1	48	—	98.1	110	45	—	70	101.2	50	70	11	20	8	60	80

Model	Optional specifications											Semi-standard specifications					
	Square embedded type pressure gauge		Digital pressure switch		Round type pressure gauge		Round type pressure gauge (Semi-standard: Z)		Round type pressure gauge (with color zone)		With auto drain	PC/PA bowl		Metal bowl		Metal bowl with level gauge	
												With barb fitting	With drain guide	With drain cock	With drain guide	With drain cock	With drain guide
	H	J	H	J	H	J	H	J	H	J	B	B	B	B	B	B	B
AC20-D	□28	27	□27.8	37.5	Φ37.5	57.5	Φ37.5	58.5	Φ37.5	58.5	104.9	—	91.4	87.4	93.9	—	—
AC30-D	□28	32.5	□27.8	43	Φ37.5	63	Φ37.5	64	Φ37.5	64	157.1	123.9	122.2	117.8	122.3	137.8	142.3
AC40-D	□28	41.5	□27.8	52	Φ42.5	73	Φ42.5	73	Φ42.5	73	186.9	155.6	153.9	149.5	154	169.5	174
AC40-06-D	□28	41.5	□27.8	52	Φ42.5	73	Φ42.5	73	Φ42.5	73	188.9	157.6	155.9	151.5	156	171.5	176
AC50-D	□28	51	□27.8	61.5	Φ42.5	82.5	Φ42.5	82.5	Φ42.5	82.5	259.9	228.6	226.9	222.5	227	242.5	247
AC60-D	□28	51	□27.8	61.5	Φ42.5	82.5	Φ42.5	82.5	Φ42.5	82.5	273.9	242.6	240.9	236.5	241	256.5	261

AC20-D to AC60-D Series F. R. L. Combination

Main Dimensions With Pressure Relief 3-Port Valve (V)

AC20-V-D

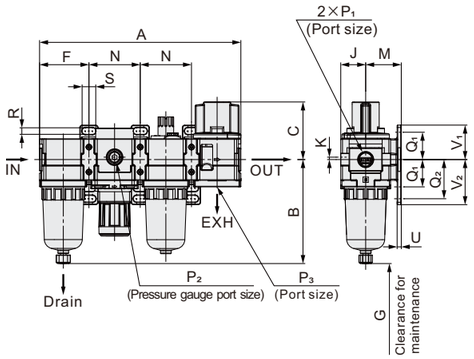

AC30-V-D

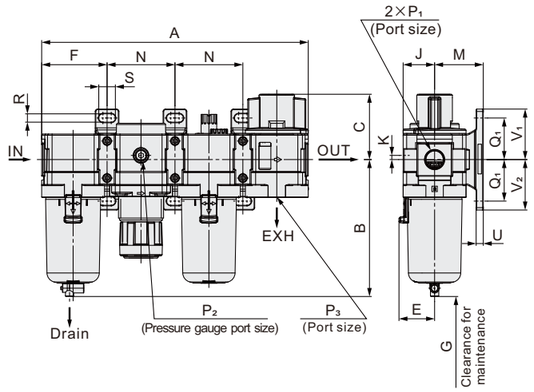

AC40-V-D to AC40-06-V-D

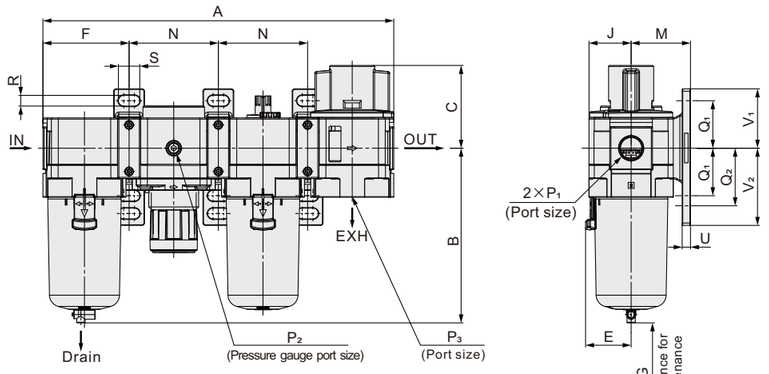

AC50-V-D

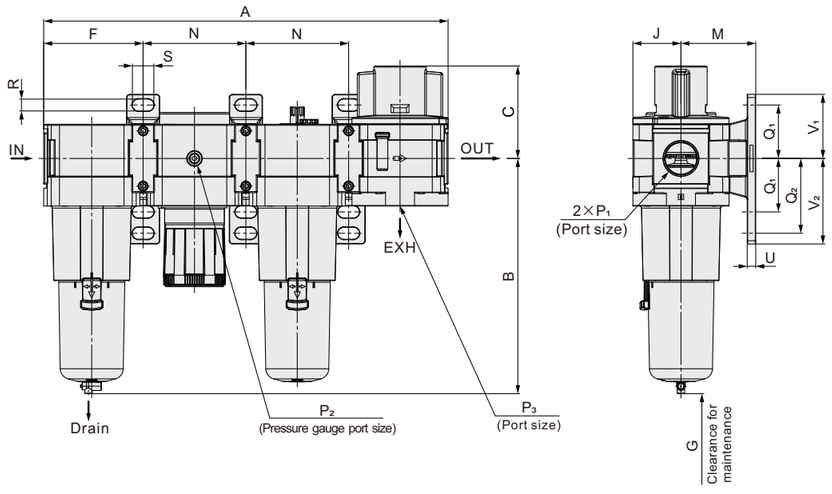

IS09001 CE
VPC PNEUMATIC®

AC20-D to AC60-D Series F. R. L. Combination

Main Dimensions

Applicable model	Optional specifications			
	Square embedded type pressure gauge	Digital pressure switch	Round type pressure gauge	Round type pressure gauge (with color zone)
AC20-V-D to AC50-V-D	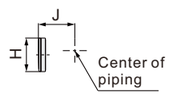	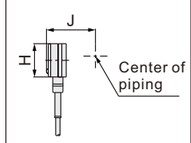	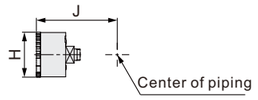	

Applicable model	Optional specifications	Semi-standard					
	With auto drain	PC/PA bowl		Metal bowl		Metal bowl with level gauge	
		Drain cock with barb fitting	With drain guide	With drain cock	With drain guide	With drain cock	With drain guide
AC20-V-D	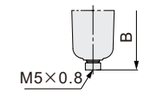		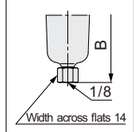		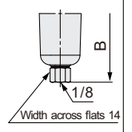		
AC30-V-D to AC50-V-D	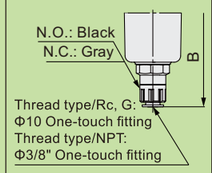	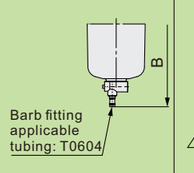	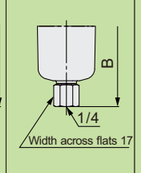		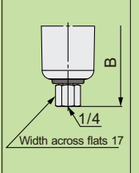	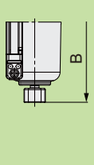	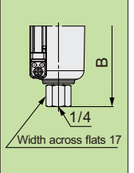

Model	Standard specifications																		
												Bracket mount							
	P_1	P_2	P_3	A	B	C	E	F	G	J	K	M	N	Q_1	Q_2	R	S	U	V_1	V_2
AC20-V-D	1/8, 1/4	1/8	1/8	169.6	87.6	48.5	—	41.6	60	21	2	30	43.2	24	33	5.5	11.5	3.5	29	38
AC30-V-D	1/4, 3/8	1/8	1/4	224.6	115.4	55	30	55.1	80	26.5	3.5	41	57.2	35	—	7	14	6	42.5	42.5
AC40-V-D	1/4, 3/8, 1/2	1/8	3/8	295.6	147.1	69.7	38.4	72.6	110	35.5	—	50	75.2	40	55	9	18	7	50	65
AC40-06-V-D	3/4	1/8	1/2	315.6	149.1	71.7	38.4	77.6	110	35.5	—	50	80.2	40	55	9	18	7	50	65
AC50-V-D	3/4, 1	1/8	1/2	378.6	220.1	86.5	—	93.1	110	45	—	70	96.2	50	70	11	20	8	60	80

Model	Optional specifications											Semi-standard specifications					
	Square embedded type pressure gauge		Digital pressure switch		Round type pressure gauge		Round type pressure gauge (Semi-standard: Z)		Round type pressure gauge (with color zone)		With auto drain	PC/PA bowl		Metal bowl		Metal bowl with level gauge	
												With barb fitting	With drain guide	With drain cock	With drain guide	With drain cock	With drain guide
	H	J	H	J	H	J	H	J	H	J	B	B	B	B	B	B	B
AC20-V-D	□28	27	□27.8	37.5	Φ37.5	57.5	Φ37.5	58.5	Φ37.5	58.5	104.9	—	91.4	87.4	93.9	—	—
AC30-V-D	□28	32.5	□27.8	43	Φ37.5	63	Φ37.5	64	Φ37.5	64	157.1	123.9	122.2	117.8	122.3	137.8	142.3
AC40-V-D	□28	41.5	□27.8	52	Φ42.5	73	Φ42.5	73	Φ42.5	73	186.9	155.6	153.9	149.5	154	169.5	174
AC40-06-V-D	□28	41.5	□27.8	52	Φ42.5	73	Φ42.5	73	Φ42.5	73	188.9	157.6	155.9	151.5	156	171.5	176
AC50-V-D	□28	51	□27.8	61.5	Φ42.5	82.5	Φ42.5	82.5	Φ42.5	82.5	259.9	228.6	226.9	222.5	227	242.5	247

IV